EagleBurgmann
a member of EKK and FREUDENBERG

RELY ON EXCELLENCE

Cartex
Single seals

Mechanical Seals | Mechanical seals for pumps | Standard cartridge seals

Features

- Single seal
- Cartridge
- Balanced
- Independent of direction of rotation
- Single seals without connections (-SN0), with flush (-SN) and with quench combined with lip seal (-QN) or throttle ring (-TN)
- Additional variants available for ANSI pumps (e.g. -ABPN) and eccentric screw pumps (-Vario)

Advantages

- Ideal seal for standardizations
- Universal applicable for packings conversions, retrofits or original equipment
- No dimensional modification of the seal chamber (centrifugal pumps) necessary, small radial installation height
- No damage of the shaft by dynamically loaded O-Ring
- Extended service life
- Straightforward and easy installation due to pre-assembled unit
- Individual adaptation to pump design possible
- Customer specific versions available

Operating range

Cartex-SN, -SN0, -QN, -TN, -Vario

Shaft diameter:
d1 = 25 ... 100 mm (1.000" ... 4.000")
Other sizes on request
Temperature:
t = -40 °C ... 220 °C (-40 °F ... 428 °F)
(Check O-Ring resistance)

Sliding face material combination BQ1
Pressure: p1 = 25 bar (363 PSI)
Sliding velocity: vg = 16 m/s (52 ft/s)

Sliding face material combination
Q1Q1 or U2Q1
Pressure: p1 = 12 bar (174 PSI)
Sliding velocity: vg = 10 m/s (33 ft/s)

Axial movement:
±1.0 mm, d1 ≥75 mm ±1.5 mm

Materials

Seal face: Silicon carbide (Q1), Carbon graphite resin impregnated (B), Tungsten carbide (U2)
Seat: Silicon carbide (Q1)
Secondary seals: FKM (V), EPDM (E), FFKM (K), Perflourocarbon rubber/PTFE (U1)
Springs: Hastelloy® C-4 (M)
Metal parts: CrNiMo steel (G), CrNiMo cast steel (G)

Standards and approvals

- WRAS
- UBA(KTW)

Recommended applications

- Universally applicable
- Process industry
- Petrochemical industry
- Chemical industry
- Pharmaceutical industry
- Power plant technology
- Pulp and paper industry
- Water and waste water technology
- Mining industry
- Food and beverage industry
- Sugar industry
- CCUS
- Lithium
- Hydrogen
- Sustainable plastics production
- Alternative fuels production
- Power generation
- Nuclear power technology
- Centrifugal pumps
- Eccentric screw pumps
- Process pumps

eagleburgmann.com
info@eagleburgmann.com

All technical specifications are based on extensive tests and our many years of experience. The diversity of possible applications means, however, that they can serve only as guide values.
We must be notified of the exact conditions of application before we can provide any guarantee for a specific case. Subject to change.

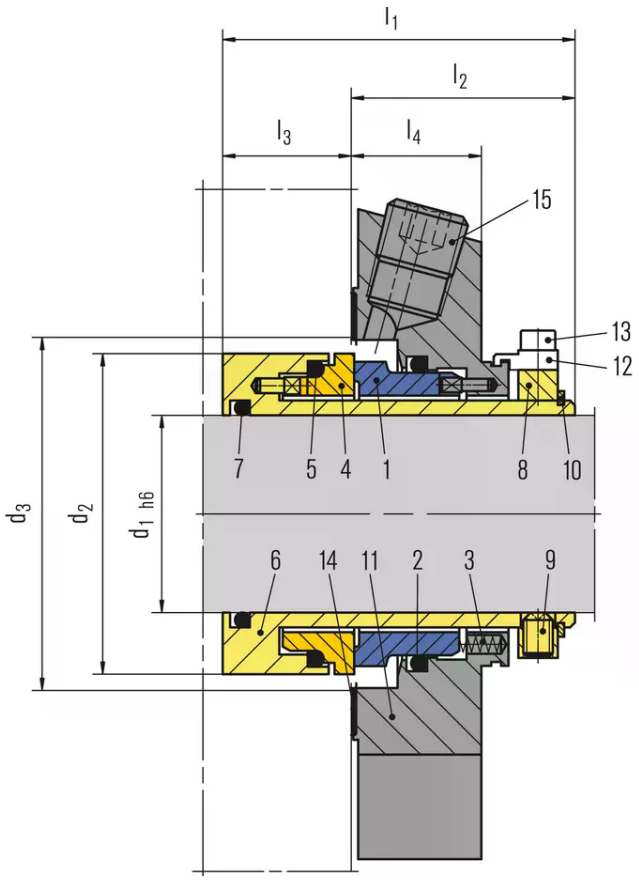

Item	Description
1	Seal face
2, 5, 7	O-Ring
3	Spring
4	Seat
6	Shaft sleeve
8	Drive collar
9	Set screw
10	Snap ring
11	Cover
12	Assembly fixture
13	Screw
14	Gasket
15	Screw plug
16	Lip seal (-QN), throttle ring (-TN)

All technical specifications are based on extensive tests and our many years of experience. The diversity of possible applications means, however, that they can serve only as guide values.
We must be notified of the exact conditions of application before we can provide any guarantee for a specific case. Subject to change.

Installation, details, options

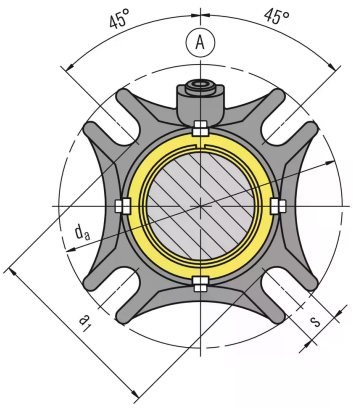

Seal cover
Cast version

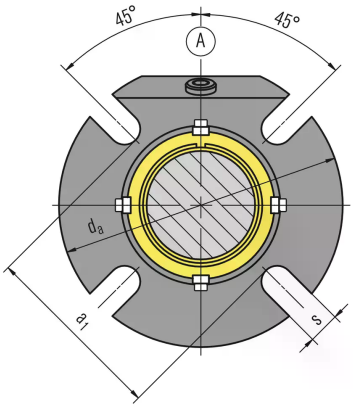

Seal cover
Machined version

All technical specifications are based on extensive tests and our many years of experience. The diversity of possible applications means, however, that they can serve only as guide values.
We must be notified of the exact conditions of application before we can provide any guarantee for a specific case. Subject to change.

Product variants

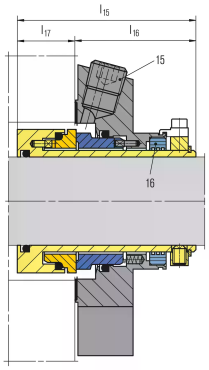

Cartex-TN
Single seal, same as Cartex-SN but with throttle ring (item 16). The cover has auxiliary connections for flushing and quench.
Throttle ring: PTFE carbon-graphite reinforced (T12).

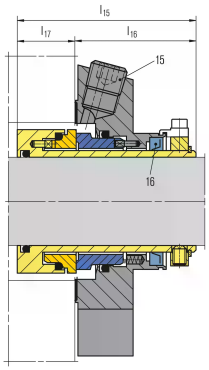

Cartex-QN
Single seal for operation with unpressurized quench. Same as "-SN' version but with outboard lip seal (item 16). The cover has auxiliary connections for flushing and quench.
Lip seal: NBR (P), PTFE carbon reinforced (T3).

Cartex-Vario
Cartridge seals with modified cover for eccentric screw pumps.
For e.g. Seepex BN,
Netzsch NM...S, NM...B, NE (P),
Allweiler AE, AEB, AED,
Robbins & Myers / Moyno 2000 CC,
and Mono E-Range.
Please inquire.

All technical specifications are based on extensive tests and our many years of experience. The diversity of possible applications means, however, that they can serve only as guide values.
We must be notified of the exact conditions of application before we can provide any guarantee for a specific case. Subject to change.

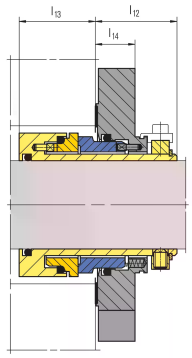

Cartex-SNO
Single seal without connections, for dead-end operation.

All technical specifications are based on extensive tests and our many years of experience. The diversity of possible applications means, however, that they can serve only as guide values.
We must be notified of the exact conditions of application before we can provide any guarantee for a specific case. Subject to change.

Dimensions

d_1	d_2	$d_3$min.	$d_3$max.	l_1	l_2	l_3	l_4	l_{12}	l_{13}	l_{14}	l_{15}	l_{16}	l_{17}	a_1	d_a	s
1.000	1.693	1.750	2.000	2.640	1.669	0.969	1.000	1.378	1.260	0.689	3.130	2.102	1.028	2.440	4.134	0.520
1.125	1.811	1.875	2.050	2.640	1.669	0.969	1.000	1.378	1.260	0.689	3.130	2.102	1.028	2.440	4.134	0.520
1.250	1.960	2.000	2.250	2.640	1.669	0.969	1.000	1.378	1.260	0.689	3.130	2.102	1.028	2.640	4.330	0.520
1.375	2.086	2.125	2.420	2.640	1.669	0.969	1.000	1.378	1.260	0.689	3.130	2.102	1.028	2.750	4.449	0.520
1.500	2.200	2.250	2.625	2.640	1.669	0.969	1.000	1.378	1.260	0.689	3.130	2.102	1.028	2.950	4.842	0.520
1.625	2.340	2.375	2.700	2.640	1.669	0.969	1.000	1.378	1.260	0.689	3.130	2.102	1.028	3.030	4.842	0.599
1.750	2.460	2.500	2.812	2.640	1.669	0.969	1.000	1.378	1.260	0.689	3.130	2.102	1.028	3.190	5.433	0.599
1.875	2.582	2.625	2.940	2.640	1.669	0.969	1.000	1.378	1.260	0.689	3.130	2.102	1.028	3.190	5.433	0.599
2.000	2.677	2.750	3.190	2.640	1.669	0.969	1.000	1.378	1.260	0.689	3.130	2.102	1.028	3.430	5.827	0.599
2.125	2.834	2.875	3.437	2.640	1.669	0.969	1.000	1.378	1.260	0.689	3.130	2.102	1.028	3.820	5.827	0.709
2.250	2.960	3.000	3.560	2.640	1.669	0.969	1.000	1.378	1.260	0.689	3.130	2.102	1.028	3.940	6.181	0.709
2.375	3.070	3.125	3.590	2.640	1.669	0.969	1.000	1.378	1.260	0.689	3.130	2.102	1.028	4.020	6.181	0.709
2.500	3.212	3.250	3.800	2.640	1.669	0.969	1.000	1.378	1.260	0.689	3.130	2.102	1.028	4.170	6.417	0.709
2.625	3.338	3.375	3.937	2.640	1.669	0.969	1.000	1.378	1.260	0.689	3.130	2.102	1.028	4.290	6.417	0.709
2.750	3.660	3.750	4.250	2.640	1.669	0.969	1.000	1.378	1.260	0.689	3.130	2.102	1.028	4.650	7.008	0.709
2.875	3.937	4.000	4.646	3.307	2.260	1.047	1.000	1.815	1.492	0.866	–	–	–	5.079	7.480	0.709
3.000	3.937	4.000	4.646	3.307	2.260	1.047	1.102	1.815	1.492	0.866	3.858	2.516	1.343	5.079	7.480	0.709
3.125	4.190	4.125	4.764	3.307	2.260	1.047	1.102	1.815	1.492	0.866	3.858	2.516	1.343	5.315	7.677	0.709
3.250	4.189	4.250	4.882	3.307	2.260	1.047	1.102	1.815	1.492	0.866	3.858	2.516	1.343	5.315	7.677	0.709
3.375	4.311	4.375	5.039	3.307	2.260	1.047	1.102	1.815	1.492	0.866	–	–	–	5.472	7.795	0.866
3.500	4.437	4.500	5.157	3.307	2.260	1.047	1.102	1.815	1.492	0.866	–	–	–	5.591	7.795	0.866
3.625	4.563	4.625	5.315	3.307	2.260	1.047	1.102	1.815	1.492	0.866	–	–	–	5.709	8.071	0.866
3.750	4.689	4.750	5.433	3.307	2.260	1.047	1.102	1.815	1.492	0.866	3.858	2.516	1.343	5.827	8.189	0.866
4.000	4.937	5.000	5.669	3.307	2.260	1.047	1.102	1.815	1.492	0.866	–	–	–	6.063	8.583	0.866

Dimensions in inch

d_1	d_2	$d_3$min.	$d_3$max.	l_1	l_2	l_3	l_4	l_{12}	l_{13}	l_{14}	l_{15}	l_{16}	l_{17}	a_1	d_a	s
25	43.0	44.0	51.5	67	42.4	24.6	25.4	35.0	32.0	17.5	79.5	53.4	26.1	62	105	13.2
28	46.0	47.0	52.0	67	42.4	24.6	25.4	35.0	32.0	17.5	79.5	53.4	26.1	62	105	13.2
30	48.0	49.0	56.0	67	42.4	24.6	25.4	35.0	32.0	17.5	79.5	53.4	26.1	65	105	13.2
32	49.8	51.0	57.0	67	42.4	24.6	25.4	35.0	32.0	17.5	79.5	53.4	26.1	67	108	13.2
33	49.8	51.0	57.0	67	42.4	24.6	25.4	35.0	32.0	17.5	79.5	53.4	26.1	67	108	13.2
35	53.0	54.0	61.5	67	42.4	24.6	25.4	35.0	32.0	17.5	79.5	53.4	26.1	70	113	13.2
38	56.0	57.0	66.0	67	42.4	24.6	25.4	35.0	32.0	17.5	79.5	53.4	26.1	75	123	13.2
40	58.0	59.0	68.0	67	42.4	24.6	25.4	35.0	32.0	17.5	79.5	53.4	26.1	75	123	14.2
42	60.5	61.5	69.5	67	42.4	24.6	25.4	35.0	32.0	17.5	79.5	53.4	26.1	80	133	14.2
43	60.5	61.5	70.5	67	42.4	24.6	25.4	35.0	32.0	17.5	79.5	53.4	26.1	80	133	14.2
45	62.5	64.0	73.0	67	42.4	24.6	25.4	35.0	32.0	17.5	79.5	53.4	26.1	81	138	14.2
48	65.6	67.0	75.0	67	42.4	24.6	25.4	35.0	32.0	17.5	79.5	53.4	26.1	84	138	14.2
50	68.0	69.0	78.0	67	42.4	24.6	25.4	35.0	32.0	17.5	79.5	53.4	26.1	87	148	14.2
53	72.0	73.0	87.0	67	42.4	24.6	25.4	35.0	32.0	17.5	79.5	53.4	26.1	97	148	18.0
55	73.0	74.0	83.0	67	42.4	24.6	25.4	35.0	32.0	17.5	79.5	53.4	26.1	90	148	18.0
60	78.0	79.0	91.0	67	42.4	24.6	25.4	35.0	32.0	17.5	79.5	53.4	26.1	102	157	18.0
65	84.8	85.7	98.5	67	42.4	24.6	25.4	35.0	32.0	17.5	79.5	53.4	26.1	109	163	18.0
70	93.0	95.0	108.0	67	42.4	24.6	25.4	35.0	32.0	17.5	79.5	53.4	26.1	118	178	18.0
75	100.0	101.6	118.0	84	57.4	26.6	28.0	46.1	37.9	22.0	98.0	63.9	34.1	129	190	18.0
80	106.4	108.0	124.0	84	57.4	26.6	28.0	46.1	37.9	22.0	98.0	63.9	34.1	135	195	18.0

All technical specifications are based on extensive tests and our many years of experience. The diversity of possible applications means, however, that they can serve only as guide values.
We must be notified of the exact conditions of application before we can provide any guarantee for a specific case. Subject to change.

d_1	d_2	$d_3$min.	$d_3$max.	l_1	l_2	l_3	l_4	l_{12}	l_{13}	l_{14}	l_{15}	l_{16}	l_{17}	a_1	d_a	s
85	109.5	111.1	128.0	84	57.4	26.6	28.0	46.1	37.9	22.0	98.0	63.9	34.1	139	198	22.0
90	115.9	117.5	135.0	84	57.4	26.6	28.0	46.1	37.9	22.0	98.0	63.9	34.1	145	205	22.0
95	119.1	120.7	138.0	84	57.4	26.6	28.0	46.1	37.9	22.0	98.0	63.9	34.1	148	208	22.0
100	125.4	127.0	144.0	84	57.4	26.6	28.0	46.1	37.9	22.0	98.0	63.9	34.1	154	218	22.0

Dimensions in Millimeter

All technical specifications are based on extensive tests and our many years of experience. The diversity of possible applications means, however, that they can serve only as guide values.
We must be notified of the exact conditions of application before we can provide any guarantee for a specific case. Subject to change.