EagleBurgmann
a member of EKK and FREUDENBERG

RELY ON EXCELLENCE

Espey WD500

Carbon Floating Ring Seals | Shaft seals

Features

- Multi-part seal rings, overlapped mortised with gas tight Joints (adjusting)
- Split housing design
- Lowest possible operation gap - lowest leakage
- Dry-running
- Self-adjusting seal rings
- Seal rings bear radial shaft movements
- Compensates axial shaft movements
- Short axial installation length
- No sealing components mounted on the shaft and hence no additional shaft vibrations

Advantages

- Easy installation by split housing design (shaft removal not required)
- Long-term operation time
- Maintainability
- Segmented seal rings for easy replacement

Operating range

Shaft diameter:
d = 45 ... 340 mm (1.77" ... 13.89")
Operating pressure: p = vacuum ... 3 bar (44 PSI) abs. (depends on peripheral velocity)
Operating temperature: t = -120 °C ... +500 °C (-184 °F ... +932 °F) for carbon
[700 °C (1,292 °F) for blast furnaces],
-120 °C ... +150 °C (-184 °F ... +302 °F) for PTFE compound
Sliding velocity:
vg = max. 40 m/s (131 ft/s)
Radial play: ± 2.5 ... 5.0 mm (± 0.1" ... 0.2")
Axial movement: theoretically unlimited
Recommended wear guard: >58 HRC

Materials

Seal ring: Carbon, PTFE compound
Housing: 1.4021, 1.4571, Hastelloy®, Titanium, Inconel®, others
Tension spring / detent: 1.4571, Hastelloy®, Titanium, Inconel®

Standards and approvals

- FDA

Recommended applications

- Gases
- Fumes and exhaust, solids containing, flammabale (Atex), acid containing and toxic gases
- (Solids containing) steams / liquid mist
- Oil mist / penetrating oil
- Water
- Chemical industry
- Waste incineration and removal industry
- Pulp and paper industry
- Lime, cement and gypsum industry
- Mining industry
- Water and waste water technology
- CO2 transportation and storage
- Medium-sized and large fans / blowers
- Bearing seals (gear box, motors)
- Steam turbines
- Mixers, agitators, dryers
- Mills (ball, hammer, beater mills)
- Centrifuges

eagleburgmann.com
info@eagleburgmann.com

All technical specifications are based on extensive tests and our many years of experience. The diversity of possible applications means, however, that they can serve only as guide values.
We must be notified of the exact conditions of application before we can provide any guarantee for a specific case. Subject to change.

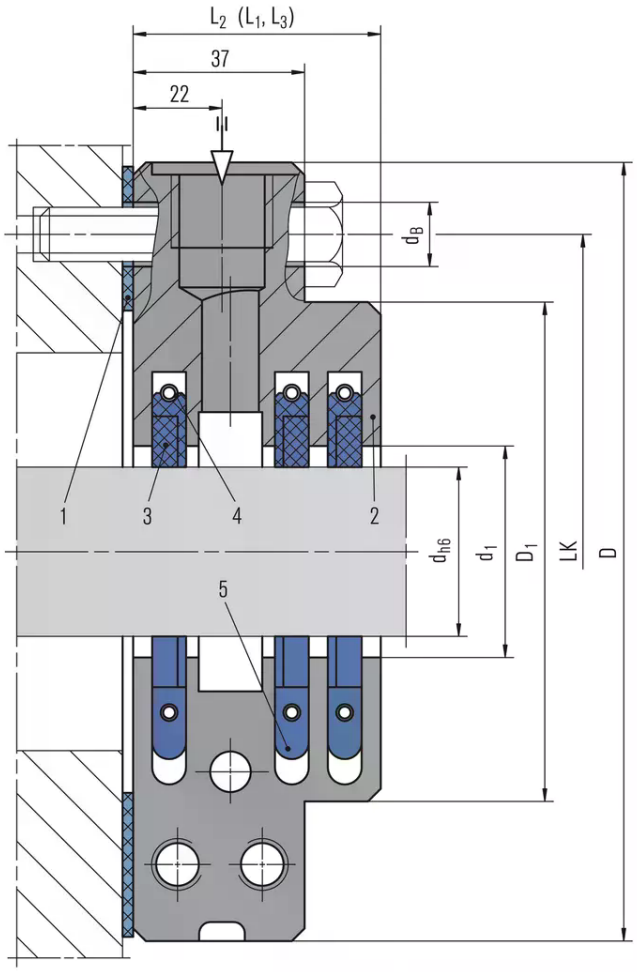

Item	Description
1	Flat seal
2	Housing, 2-piece
3	Seal ring
4	Tension spring
5	Detent

All technical specifications are based on extensive tests and our many years of experience. The diversity of possible applications means, however, that they can serve only as guide values.
We must be notified of the exact conditions of application before we can provide any guarantee for a specific case. Subject to change.

Installation, details, options

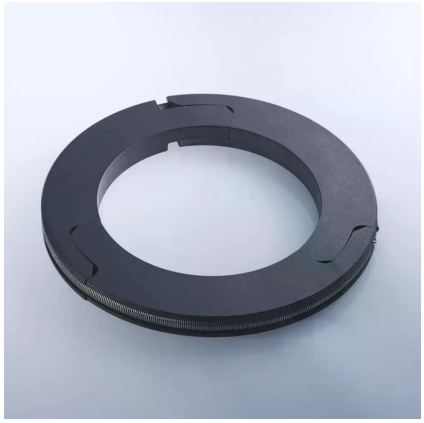

Seal ring Espey WD500 (3-part, overlapped mortised)

Espey WD500 Special seal as rotary joint in cement mills

Espey WD500 (upper housing split design)

All technical specifications are based on extensive tests and our many years of experience. The diversity of possible applications means, however, that they can serve only as guide values.
We must be notified of the exact conditions of application before we can provide any guarantee for a specific case. Subject to change.

Product variants

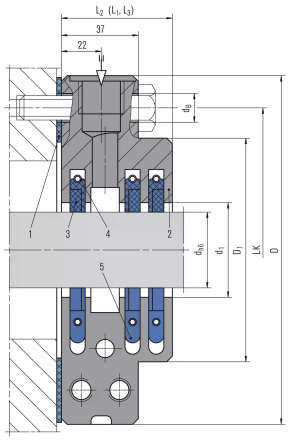

Espey WD500-WDS
with barrier gas port (for e.g. toxic and solids containing gases).

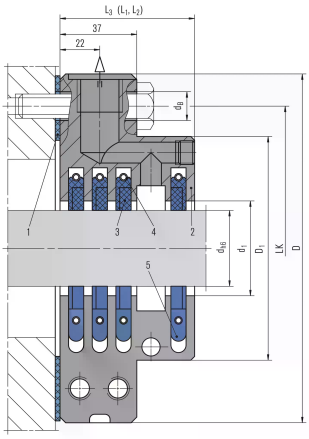

Espey WD500-WDA
for applications involving condensate formation to enable directed throwing off to the outside of the housing (not for solids containing gases).

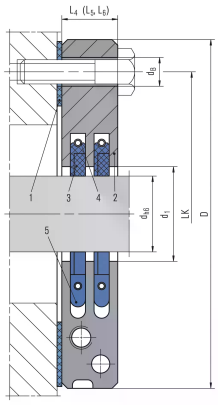

Espey WD500-WDK
with short design (for clean media, not for solids containing gases).

All technical specifications are based on extensive tests and our many years of experience. The diversity of possible applications means, however, that they can serve only as guide values.
We must be notified of the exact conditions of application before we can provide any guarantee for a specific case. Subject to change.

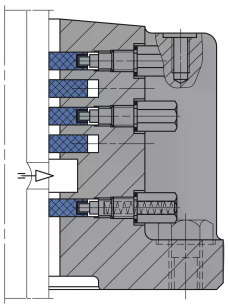

Espey WD500 Special
as blast furnace seal

Dimensions

d_{h6}1)	d_i1)	D1)	$D_1$1)	d_B1)	LK1)	$L_1$2)	$L_2$2)	$L_3$2)	$L_4$3)	$L_5$3)	$L_6$3)
45	50	210	140	15	175	47	59	71	28	40	52
50	58	220	150	15	185	47	59	71	28	40	52
60	68	230	160	15	195	47	59	71	28	40	52
70	78	240	170	15	205	47	59	71	28	40	52
80	90	260	180	15	220	47	59	71	28	40	52
90	100	270	190	15	230	47	59	71	28	40	52
100	110	280	200	15	240	51	65	79	32	46	60
110	120	290	210	15	250	51	65	79	32	46	60
120	130	300	220	15	260	51	65	79	32	46	60
130	140	310	230	15	270	51	65	79	32	46	60
140	150	320	240	15	280	51	65	79	32	46	60
150	160	330	250	15	290	51	65	79	32	46	60
160	170	340	260	19	300	51	65	79	32	46	60
170	180	350	270	19	310	51	65	79	32	46	60
180	190	360	280	19	320	51	65	79	32	46	60
190	200	370	290	19	330	51	65	79	32	46	60
200	210	420	310	15	365	55	71	87	36	52	68
220	230	440	330	15	385	55	71	87	36	52	68
240	250	460	350	15	405	55	71	87	36	52	68
260	270	480	370	19	425	55	71	87	36	52	68
280	290	500	390	19	445	55	71	87	36	52	68
300	310	520	410	19	465	55	71	87	36	52	68
320	330	540	430	19	485	55	71	87	36	52	68
340	350	560	450	19	505	55	71	87	36	52	68

Dimensions in millimeter 1) For all types 2) For types WDS, WDA 3) For type WDK Special sizes on request. Special dimensions for e.g. blast furnaces, mills and dryers up to d = 4,000 mm.

All technical specifications are based on extensive tests and our many years of experience. The diversity of possible applications means, however, that they can serve only as guide values.
We must be notified of the exact conditions of application before we can provide any guarantee for a specific case. Subject to change.