EagleBurgmann
a member of EKK and FREUDENBERG

RELY ON EXCELLENCE

Espey WD200

Carbon Floating Ring Seals | Shaft seals

Features

- Split housing design
- Multi-part seal rings, radially cut
- Very small operation gap - low leakage
- Dry running
- Self-adjusting seal rings
- Seal rings bear radial shaft movements
- Compensates axial shaft movements
- No sealing components mounted on the shaft and hence no additional shaft vibrations
- Seal rings running contact-free - sliding faces and machine consume no additional power

Advantages

- Easy installation by split housing design (shaft removal not required)
- Long-term operation time
- Maintainability
- Segmented seal rings for easy replacement

Operating range

Shaft diameter:
d = 40 ... 340 mm (1.57" ... 13.39")
Operating pressure:
p = vacuum ... 20 bar (290 PSI) abs.
Operating temperature: t = -120 °C ... +800 °C (-184 °F ... +1,472 °F) for carbon,
max. 225 °C (437 °F) for PTFE compound
Sliding velocity:
vg = max. 150 m/s (492 ft/s) for carbon,
max. 40 m/s (131 ft/s) for PTFE compound
Radial play: ±1.0 ... 5.0 mm (±0.04" ... 0.2")
Axial movement: theoretically unlimited
Recommended wear guard: >300 HB (low pressure), >58 HRC (high pressure)

Materials

Seal ring: Carbon, PTFE compound
Housing: 1.4021, 1.4571, Hastelloy®, Titanium, Inconel®, others
Tension spring / detent: 1.4571, Hastelloy®, Titanium, Inconel®

Standards and approvals

- FDA
- Compliant to TA Luft (German Clean Air Act)*

"(*) Kohleschwimmringdichtungen werden in der TA Luft nicht explizit genannt, können aber in bestimmten Anwendungen eine Lösung sein. Der Einsatz ist mit der Genehmigungsbehörde zu klären."

Recommended applications

- Gases
- Fumes and exhaust,solids containing, flammable (Atex), acid containing and toxic gases
- (Solids containing) steams / liquid mist
- Oil mist / penetrating oil
- Water
- Chemical industry
- Waste incineration and removal industry
- Power plant technology
- Petrochemical industry
- Food processing industry
- Metal production and processing
- CO2 transportation and storage
- Medium-sized and large fans / blowers
- Bearing seals (gear box, motors)
- Steam turbines
- Mixers, agitators, mills, dryer

eagleburgmann.com
info@eagleburgmann.com

All technical specifications are based on extensive tests and our many years of experience. The diversity of possible applications means, however, that they can serve only as guide values.
We must be notified of the exact conditions of application before we can provide any guarantee for a specific case. Subject to change.

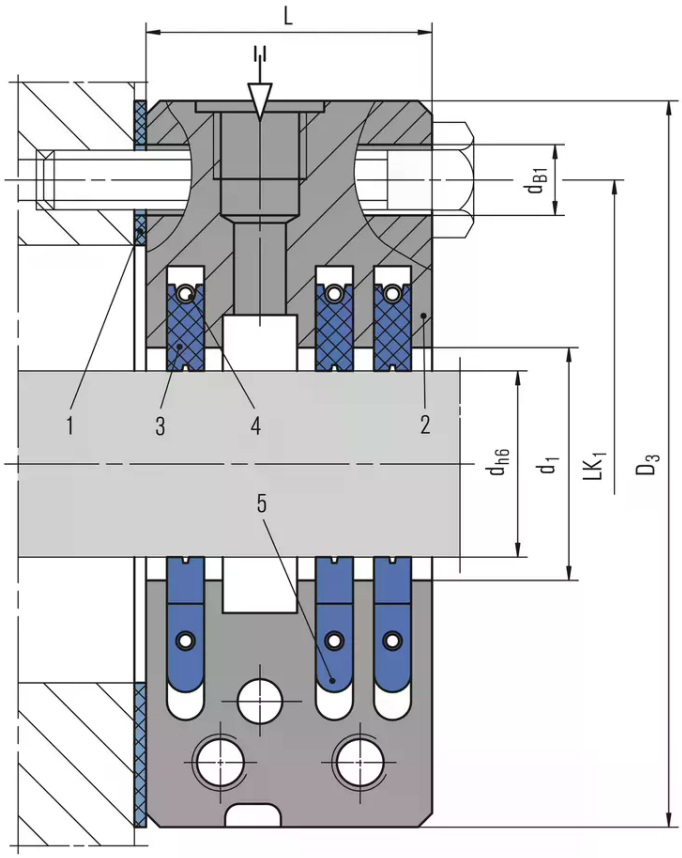

Item	Description
1	Flat seal
2	Housing, 2-piece
3	Seal ring
4	Tension spring
5	Detent

Installation, details, options

Espey WD200 (split design)

Seal rings Espey WD200 (3-part, radial cut), Carbon / PTFE compound

All technical specifications are based on extensive tests and our many years of experience. The diversity of possible applications means, however, that they can serve only as guide values.
We must be notified of the exact conditions of application before we can provide any guarantee for a specific case. Subject to change.

Product variants

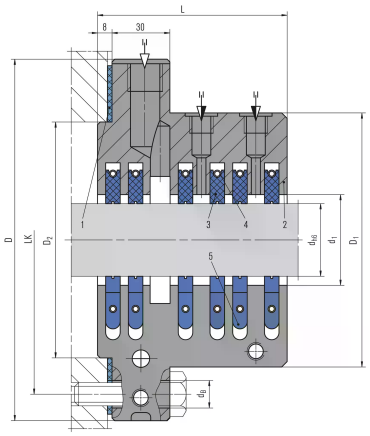

Espey WD200-WDS
with barrier gas and grease barrier port (for e.g. toxic and solids containing gases as well as Atex applications, on special request).

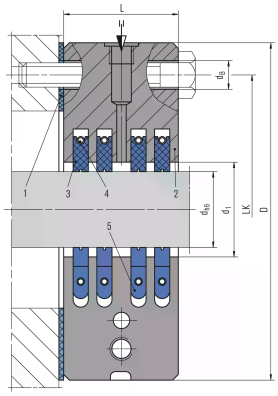

Espey WD200-WDK
in kurzer Bauform mit Fettsperre - Typ WDKF zusätzlich mit verkleinertem Gehäuseaußendurchmesser (anwendbar bei reinen Medien, nicht für feststoffbeladene Gase).

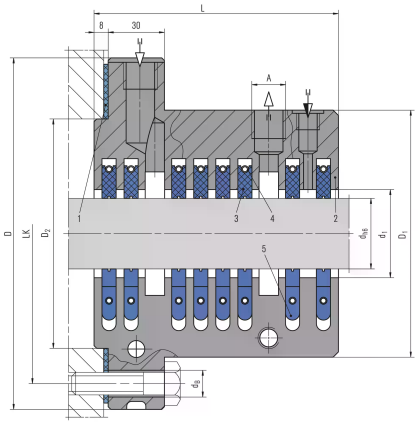

Espey WD200-WDSA
with barrier gas, suction and grease barrier port (for e.g. toxic and solids containing gases with condensate formation as well as Atex applications).

All technical specifications are based on extensive tests and our many years of experience. The diversity of possible applications means, however, that they can serve only as guide values.
We must be notified of the exact conditions of application before we can provide any guarantee for a specific case. Subject to change.

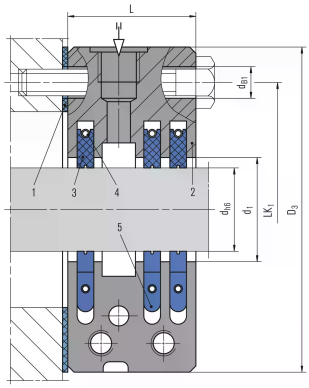

For toxic and solids containing gases as well as Atex applications type shaft seal
Espey WD200-WDKS with short design, reduced housing outside diameter and barrier gas port (for e.g. toxic and solids containing gases as well as Atex applications, on special request).

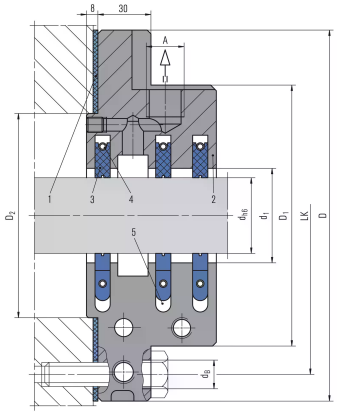

Espey WD200-WDA
for applications involving condensate formation to enable directed throwing off to the outside of the housing.

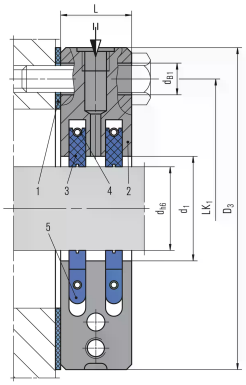

All technical specifications are based on extensive tests and our many years of experience. The diversity of possible applications means, however, that they can serve only as guide values.
We must be notified of the exact conditions of application before we can provide any guarantee for a specific case. Subject to change.

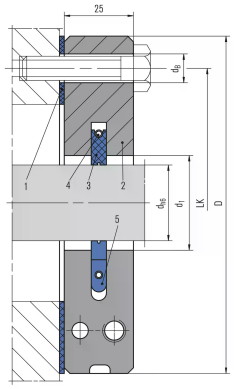

EspeyWD200-WD \n In short design with 1 to 4 rings for simple low-pressure applications up to 2 bar a atm. Available from a width of 25 mm. This variant is not suitable for toxic, solid gases and flue gases.

All technical specifications are based on extensive tests and our many years of experience. The diversity of possible applications means, however, that they can serve only as guide values.
We must be notified of the exact conditions of application before we can provide any guarantee for a specific case. Subject to change.